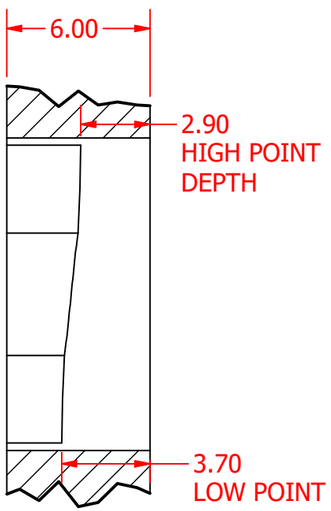


SECTION D-D
SCALE 4 : 1

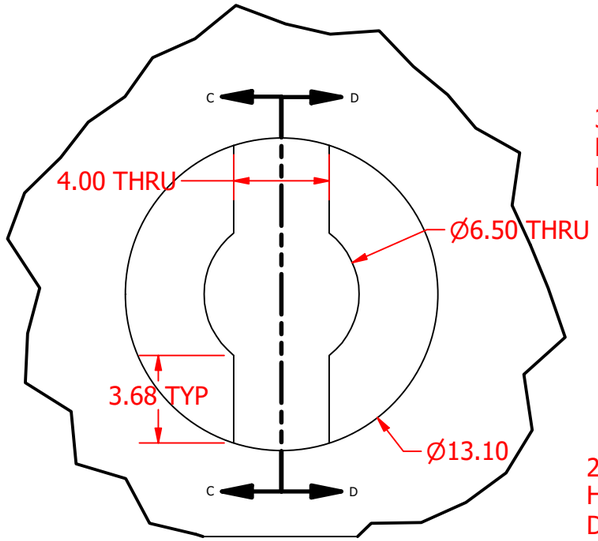


DETAIL B
SCALE 4 : 1

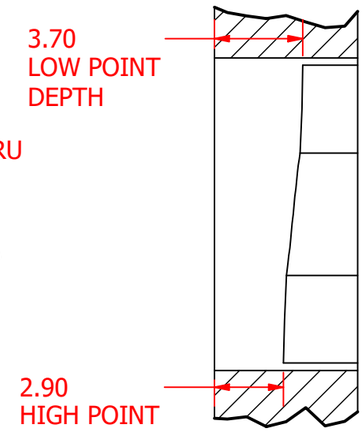


SECTION C-C
SCALE 4 : 1

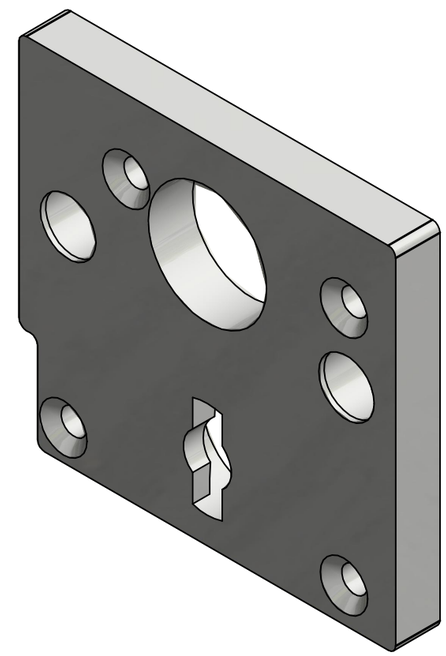

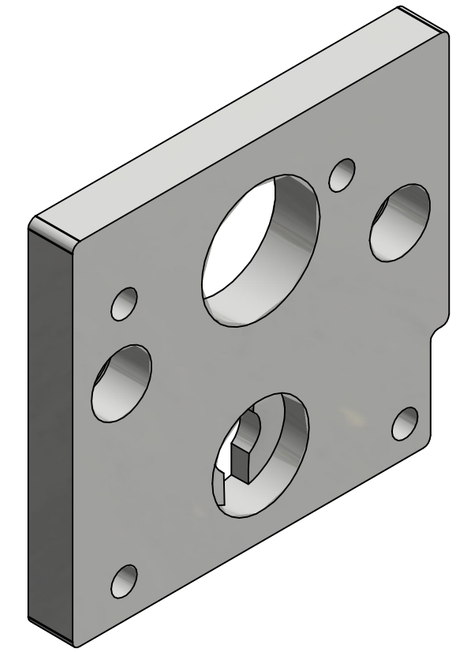

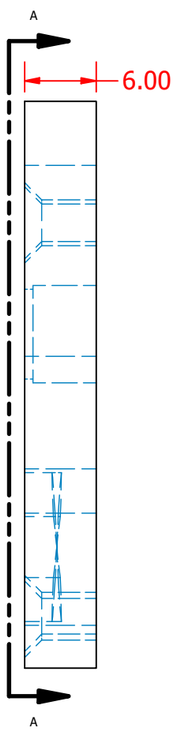


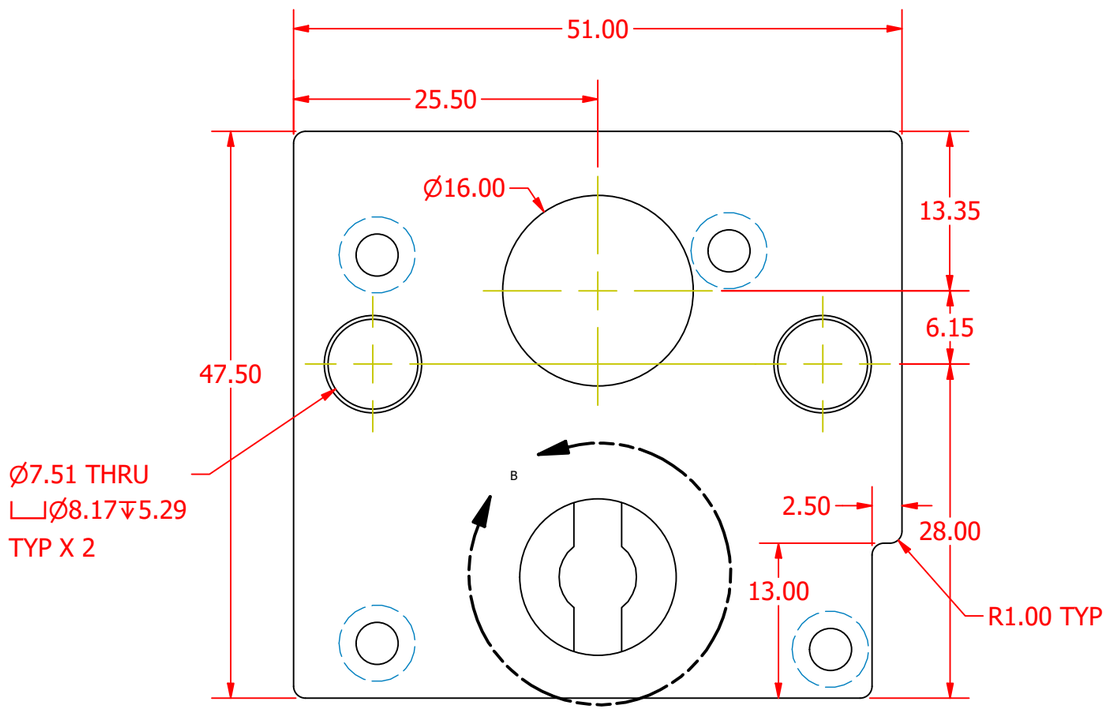


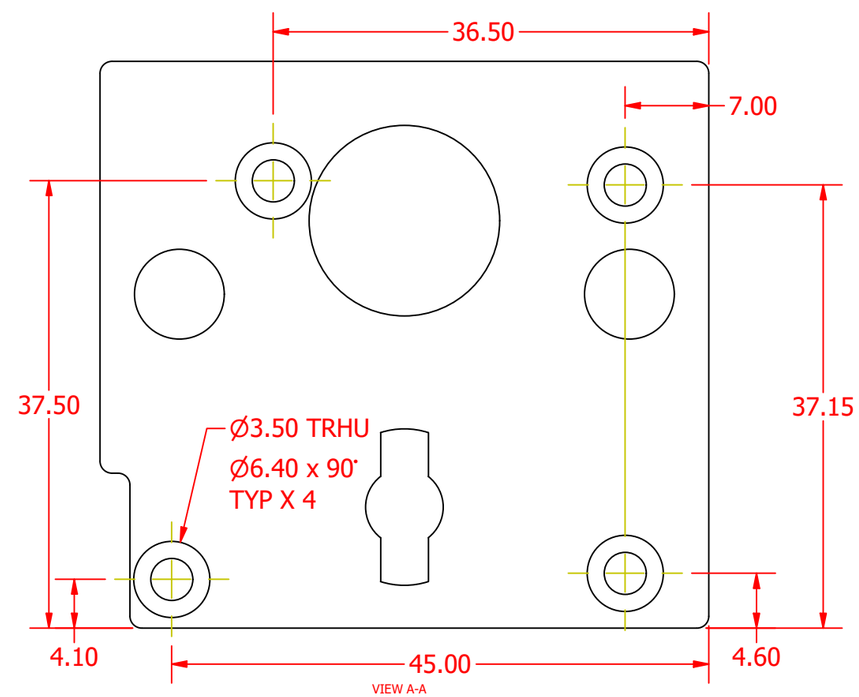


VIEW A-A
SCALE 2/1

| | | | |
|---|---|---|---|
| DRAWN Good At Yugioh | | | |
| CHECKED | 9/1/2020 | | |
| QA | | | |
| MFG | | TITLE | |
| APPROVED | 9/1/2020 | Blackbox Toolhead Plate | |
| SIZE 11x17 | DWG NO TOOLHEAD | | REV |
| SCALE 2/1 | SHEET 1 OF 1 | | |

TOLERANCE UNLESS OTHERWISE SPECIFIED

| DECIMAL | DIMENSION | CONCENTRICITY |
|---|---|---|
| X.XX" | ±0.1 | 0.1 F.I.R. |
| X.XX" | ±0.06 | 0.06 F.I.R. |
| X.XXX" | ±.010 | 0.010 F.I.R. |

ANGULAR ± 1.5°

ALL DIMENSIONS ARE METRIC UNLESS OTHERWISE NOTED