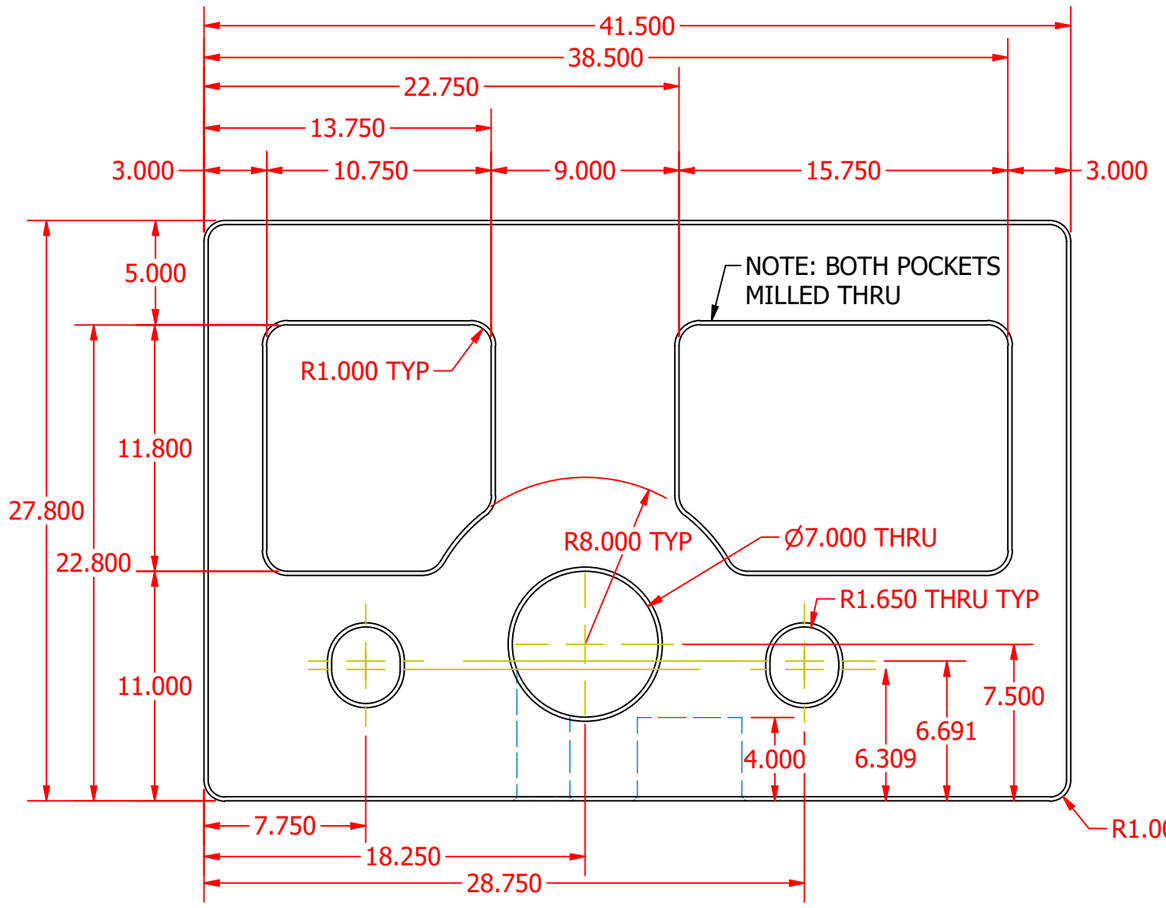

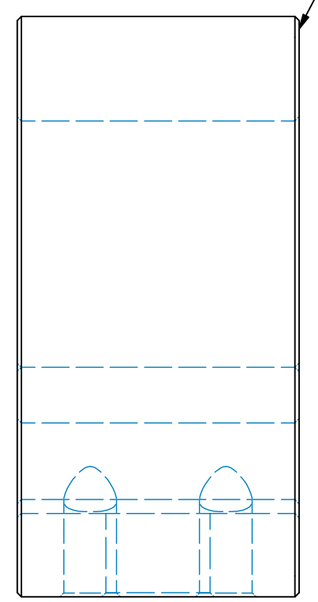

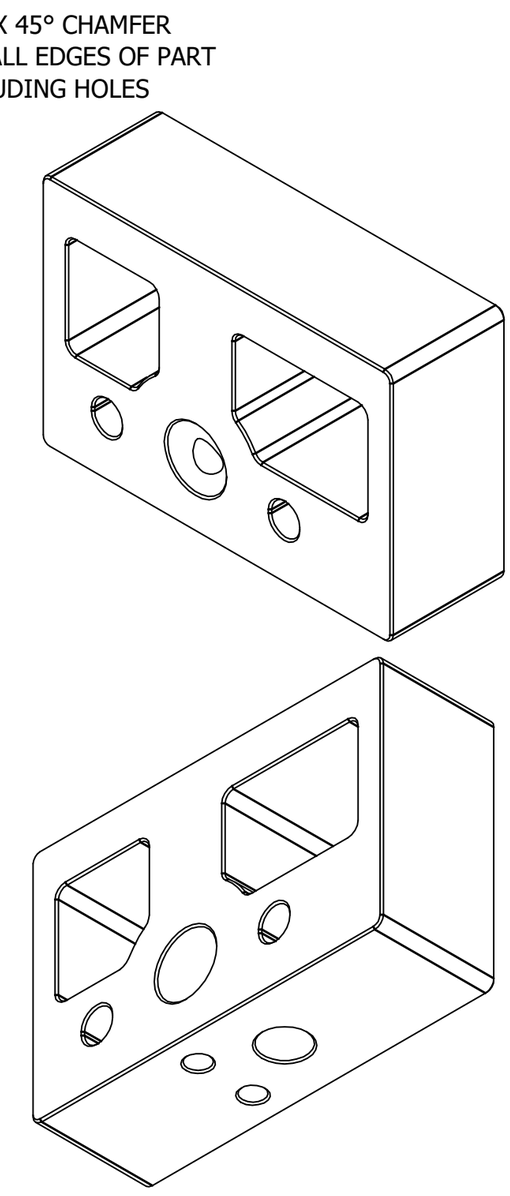

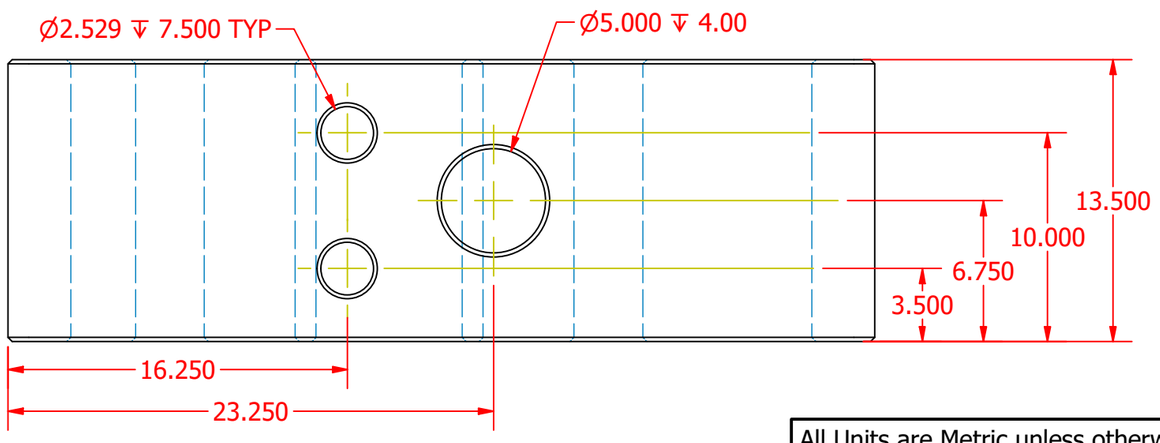

All Units are Metric unless otherwise noted

DRAWN	5/16/2020	
CHECKED	5/17/2020	
QA		
MFG		
APPROVED	5/17/2020	

TITLE

SIZE		DWG NO	REV
		CNC_Toolcooler_v1	
SCALE 3.5/1		SHEET 1 OF 1	