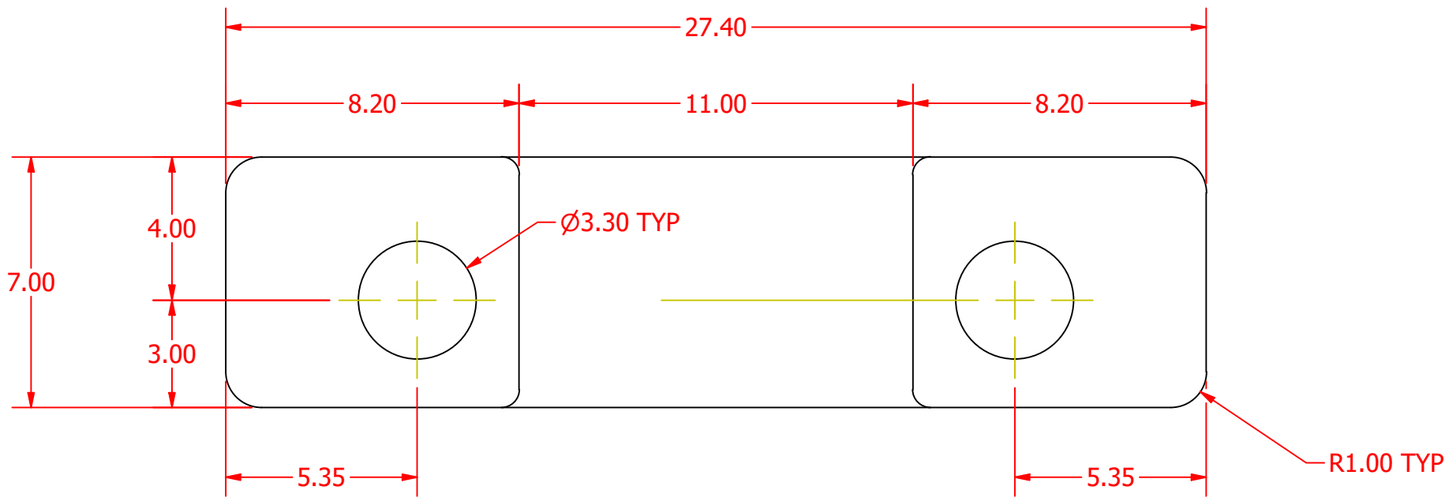

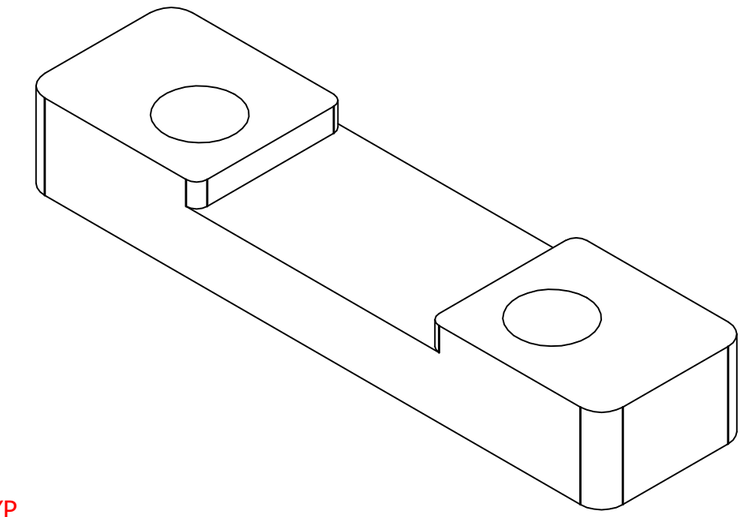

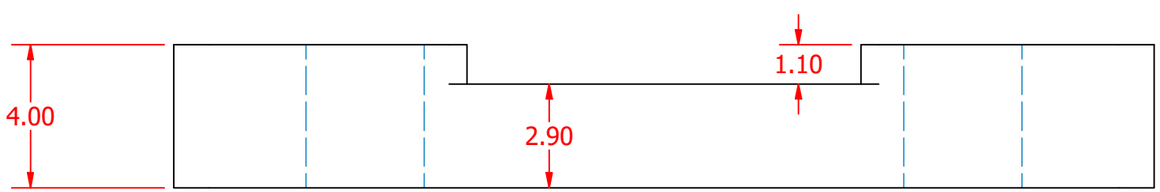

VIEW1
SCALE 6 : 1

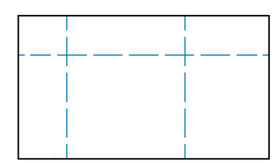

TOLERANCE UNLESS OTHERWISE SPECIFIED			
DECIMAL	DIMENSION	CONCENTRICITY	
X.XX"	±0.1	0.1 F.I.R.	
X.XX"	±0.06	0.06 F.I.R.	
X.XXX"	±.010	0.010 F.I.R.	
ANGLES ± 0.5°			

DRAWN
Cyrod At Yugioh
CHECKED
QA
MFG
APPROVED

TITLE

ALL DIMENSIONS ARE METRIC UNLESS OTHERWISE NOTED

SIZE 11x17 | DWG NO CNC_Belt_Clamp_v2 | REV

SCALE 6 : 1 | SHEET 1 OF 1